By appointment to The Royal Danish Court

morsø

Instructions for Installation and Use

7110 & 7140

EN 13240 · (75,5% Efficiency)

MORSØ JERNSTØBERI A/S . DK-7900 NYKØBING MORS
E-Mail: stoves@morsoe.com · Website: www.morsoe.com

Enjoy your new Morsø stove!

Morsø, the largest stove manufacturer in Denmark, has been making cast-iron stoves of the highest quality since 1853. By carefully following the instructions below, we are certain that you will enjoy many years of comfortable warmth from your new Morsø stove.

CONTENTS

			Page
1.0	**Installing your Morsø stove**		
	1.1	Unpacking the stove	3
	1.2	Installing the stove	3
	1.3	Chimney Sweeping	3
	1.4	Stove placement/clearance requirements	3
	1.5	The chimney	5
	1.6	Pipe connections	5
	1.7	Connecting to a masonry chimney	6
	1.8	Connecting to a steel chimney	6
	1.9	Draft conditions	7
2.0	**Firing the stove**		
	2.1	Lighting instructions and fuelling intervals	8
3.0	**Routine stove maintenance**		
	3.1	External maintenance	12
	3.2	Internal maintenance	12
	3.3	Cleaning the stove	13

Additional accessories
Morsø also offers a comprehensive line of floor plates and accessory products that can facilitate the safe and efficient operation and maintenance of your Morsø stove.

Cast iron
Cast iron is a live material. There are no two ovens that are identical. This is partly due to the tolerances of the casting process, partly because the ovens are a work of craftsmanship.

1.0 Installing your Morsø stove

1.1 Unpacking the stove

First remove the outer carton and lay flat next to the stove; this can act as a protective working surface during the assembly procedure.

For shipping purposes, the stove is bolted to the wooded pallet; it should be released from the pallet by removing the bolts from the underside.
Remove the 2 cast iron baffle plates, leg package and bottom grate from inside the stove and set aside.

Mounting the legs
Gently lay the stove onto its back; the Morsø 1710 stove weighs 140 kg and Morsø 7140 weighs 150 kg. therefore any lifting or moving of the stove should be performed by 2 people.
Using the 4 bolts and washers placed inside the stove, attached the legs to the underside of the base plate. DO NOT USE THE CARRIAGE BOLTS AND WASHERS. Also note that you should use 2 washers for each of the two front legs.

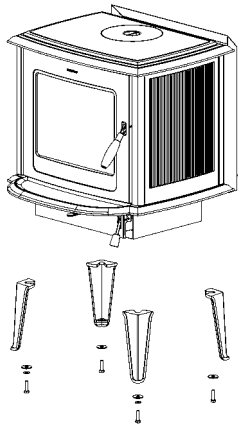

The stove is intended for intermittent use.

1.2 Installing the stove

The stove and chimney installations MUST comply to all current National and Local Building Regulations; your approved Morsø dealer or your local building control officer can advise regarding this. Ultimately, it is you and your installer who is responsible that the installation complies.

1.3 Chimney Sweeping

It may also be wise to consult your local chimney sweep before installing the stove. After your stove has been installed, it is advisable to have the chimney checked and swept at least once a year. In any case, if your chimney has not been used for some time, it should be inspected for cracking, bird nests, etc. before it is put back into use.

1.4 Stove placement/clearance requirements

Minimum Clearance requirements apply if the stove is placed near to combustible materials. Permitted clearances to combustible materials are also indicated on the data plate on the rear of the stove.

In situations where the stove is to be fitted into a brick or non-combustible recess, we recommend that the stove is installed with at least 10 cm clearance to the wall, this will allow heat to circulate around the stove; also the maintenance of the outside stove is easier. When applied to masonry, a layer of wallpaper is normally classified as a non-combustible surface.

Minimum clearances to combustible surfaces:

Stove type	Behind the stove (A)	To the sides of the stove (B)	Above the Stove furniture	Clearances to furniture
Morsø 7110 uninsulated flue	300 mm	500 mm	500 mm	1000 mm
Morsø 7110 insulated flue	150 mm	500 mm	500 mm	1000 mm
Morsø 7140 uninsulated flue	300 mm	500 mm	500 mm	1000 mm
Morsø 7140 insulated flue	150 mm	500 mm	500 mm	1000 mm

Morsø 7110/7140

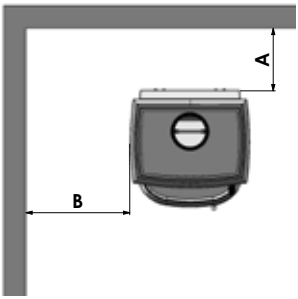

Morsø 7110

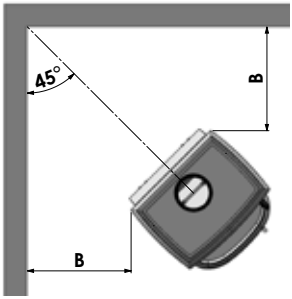

Morsø 7140

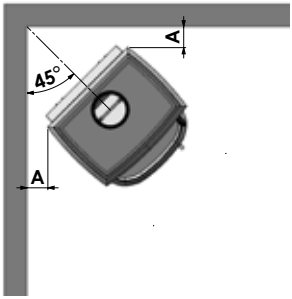

On the floor

National and Local Building Regulations must again be observed when considering the type, thickness and area of the hearth to be used in the installation. The hearth temperature under safety test was less than 65°C.

One should of course always make certain that the underlying floor surface can bear the weight of the stove.

Clearances to Furniture

The clearance requirement from the stove to any furniture should be no less than 1000 mm. It is always necessary to assess whether or not any furniture or other objects situated close-by can be affected by heat, i.e. dried out.
The distance to any combustible material in front of the stove is minimum 1000 mm.
The surface of a wood burning stove gets extremely hot when used and therefore special attention to safety is paramount, especially where children or the infirm are present.

1.5 The chimney

Only if National or Local Regulations permit are you permitted to connect a stove into a chimney that is shared by another appliance. YOU MUST be aware of any applicable Regulations in this respect.

The wood-burning stove must never been connected to a chimney to which a gas-burning stove or appliance is connected.

An efficient modern stove places heavy demands on the chimney, and you should have the chimney regularly swept and inspected by your approved chimney sweep.

The cross-sectional area of the chimney (at its narrowest point) must comply with National and Local Building Regulations. Generally, the area needed for a Morsø wood-burning stove installation should measure at least 175 cm2 (150 mm diameter).
An over-sized chimney is generally hard to keep warm and results in poor draft. In cases where there is an oversized masonry chimney, it is recommended that the chimney be lined using an appropriate chimney lining system with the correct internal diameter.
With respect to the chimney termination, all chimneys should terminate in accordance with National and Local Building Regulations.
Note that National and Local Regulations also apply with regard to the placement of chimneys and flues in connection with thatched roofs. See the section on Draft Conditions, 1.9.

The chimney or flue system must be equipped with access doors for inspection and cleaning. The size of the cleaning door in the chimney must at least equal to that of the cross-sectional area of the chimney.

In the event that a chimney fire occurs resulting from faulty operation or prolonged use of damp wood fuel, close the air vents completely and contact your local fire department immediately.

1.6 Fluepipe connections

The stove is supplied with a factory fitted flue collar (1), this is fitted to the top plate and a round cast iron blanking plate fitted in the cast iron back panel behind the rear heat shield.

When required, the flue collar can be removed and relocated to the rear flue outlet. To do this, simply knock out the round panel cut into the rear shield to reveal the cast iron blanking plate situated behind. Untwist the blanking plate anticlockwise and remove. The flue collar can now be clamped into position using the fixing lugs attached.

The blanking plate should then be positioned onto the top flue outlet and secured into place by pressing downwards and twisting clockwise. The blanking plate can also function as an extra clean-out access whilst performing the annual cleaning service of the stove and chimney.

How to position the baffle plates
The upper baffle (3) made of vermiculite are fitted in the stove on delivery.
The 2 cast iron baffles (1) are positioned correctly above 2 stainless steel pipes that provide the secondary air supply to the combustion (see drawing).
The Insulation blanket (2) is carefully positioned above the 2 cast iron baffles.
Be sure that the baffles are positioned correctly and that the insulation blanket covers all of the baffle before lighting the stove.

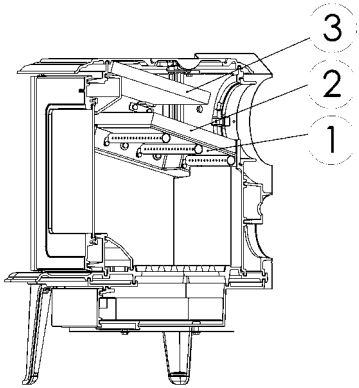

1.7 Connecting the stove to a masonry chimney

A wall sleeve should be bricked securely into the wall of the chimney at the appropriate height and the stovepipe inserted centrally. The pipe must not extend into the actual chimney opening, but rather must reach only to the inside of the chimney aperture. The gap between the stovepipe and sleeve must be sealed using glass fibre packing rope.

Only use stovepipe components that comply to National and Local Building Regulations.

1.8 Connecting to a stainless steel insulated chimney system

If your installation involves taking the chimney straight up and through the ceiling, you must comply with National, Local Building Regulations or flue manufacturers instructions concerning clearances to combustible materials such as walls, floor joists and ceilings. The joint between the stove flue collar and the stovepipe must also be sealed using the glass fibre rope provided. It is important that the insulated flue system is properly supported both at ceiling level and at roof level. THE STOVE MUST NOT BEAR THE WEIGHT OF THE CHIMNEY SYSTEM (See chimney manufacturer's instructions). Excessive weight on the stove will inhibit expansion and could lead to damage of the stove top. Damage caused to the stove in this way would not be covered by the manufacturers guarantee.

In the event that a chimney fire occurs resulting from faulty operation or prolonged use of damp wood fuel, close the air vents completely and contact your local fire department immediately.

Be aware of the following:

Cleaning procedure: Discuss this with chimney sweep or qualified installer prior to or during the stove installation.
Chimney draft: If the chimney draft is naturally poor it is better to install the flue from the top of the stove so as to minimise any internal resistance of the flue gases.
Avoid having any more than 2 bends in the flue system and limit the length of the offset between bends.

Fresh air supply

A wood-burning stove requires air for combustion and therefore you may need to install additional ventilation to the room, especially so in well insulated houses. If the air supply is inadequate the chimney draft may be too weak, with the possible result that the stove will not burn properly; smoke spillage may also occur during the refuelling process.
On a positive note, a properly installed wood-burner will give even the most efficient houses a pleasant and natural ventilation.

1.9 Draft conditions

If smoke spillage occurs when the fire door is opened, it is probably due to poor chimney draft. This type of stove requires at least 12 pa of chimney draft to achieve satisfactory combustion and smoke spillage prevention. However, in cases where the stove door is opened too vigorously you could expect that slight smoke spillage may occur.
The flue gas temperature at the rated output is 278° C relative to 20° C.

If you have any doubts, you may want to have your installer measure the draft in the chimney.

Draft conditions
The chimney's draft is the resulting effect within the flue caused by the difference in temperature within the flue and the cooler temperature outside. Other factors that can influence the level of draft include the length of the flue, insulation of the chimney, adverse weather conditions or tall buildings or trees nearby the flue terminal.

Poor draft occurs when:
- **The atmospheric temperature difference is too low, e.g. a poorly insulated chimney. If the chimney is excessively cool, it may help to 'prime' the flue before the fire is lit. Just place a screwed-up sheet of newspaper in the flue-ways of the stove and ignite.**
- **The outside temperature is too high, e.g. during the summer months.**
- **There is no air movement (wind) outside.**
- **The chimney is not tall enough, with the result that the terminal sits in the lee of the roof surface or in the vicinity of tall trees or neighbouring buildings. These conditions are also associated with downdraft where the flue gases are pushed back down the chimney.**
- **Flue draft is diluted by residual air entering the chimney, e.g. due to inadequate flue-pipe joints or leaks at the cleaning door or flue collar.**
- **Unsealed, unused fireplaces are connected to the chimney.**
- **The flue is blocked, e.g. by soot, due to inadequate cleaning, loose debris or even a birds nest.**
- **The house is too tightly sealed (see section on Fresh air supply).**

A good draft is achieved when:
- **The temperature difference between the chimney and outside is high. This also applies during firing, when the need is greatest.**
- **The weather is clear and there is a good wind.**
- **The chimney is of the proper height, i.e. minimum 4 meters over the stove and the termination adequately clear of the roof line.**

2.0 Firing the stove/Using your stove

The heat output of your stove is regulated by means of 2 air inlets. The pre-heated primary air supply that with great speed is supplied to the fire across the glass window and controlled by the lever under the ash lip. The primary air controls the combustion and is fully open when the lever is pushed to the right.
The factory set secondary air is supplied above the fire through a number of holes in the stainless steel pipes placed in the roof of the firebox. The secondary air is always opened and cannot be controled.

The stove's rated heat output is 5 kW. The efficiency is 75,5 %. Your new Morsø stove is EN-tested and recommended to be fired with wood and intended for intermittent use.

N.B!
Wood is a material that contains a great deal of gas (approximately 75 %). The gases are released when the wood is lit and heated up. For this reason, it is important that the gases are ignited quickly after stoking.
If the wood just lies smouldering, especially after re-stoking, a lot of smoke is created, which, in the worst case, may cause an explosive ignition of the gasses, resulting in damage to the stove.

In order to ignite the gases that are released from the wood, and to keep clear, lasting flames during the combustion process, it is important to let in the required quantity of oxygen (air supply) at all times.

The setting of the air supply, the method of ignition and the lighting intervals depend on the draught in the chimney, the wind and weather, the amount of heat required, the fuel, etc. This means that it may take some time before you get to know the correct functioning of the stove under any given circumstances.

Although you can fire your Morsø stove with almost all kinds of wood, you should not fire with wet wood, or unseasoned wood. Wood ought to be stored under a roof for at least 1 year, and preferably 2 years, with free access to wind. Wood should be chopped as soon as possible after felling if it is to dry quickly. The wood can be used once the moisture content is less than 20%. During the EN test, all stoves are tested with wood with a moisture content of (16 ± 4)%.

Never use driftwood, as it usually has a high salt content, which damages both the stove and the chimney. Impregnated and painted wood and chipboard emit poisonous smoke and fumes, so they should not be used as fuel either.

Please note that liquid fuel may not be used in the stove.

Pieces of wood with a diameter greater than 10 cm should always be chopped.
The pieces of wood should be short enough to be able to lie flat over the layer of embers, with air at both ends.
The maximum length of fuel in the stove is 40 cm.
The maximum quantity of fuel is 2.5 kg/hour (max. 3 pieces of wood each time you re-stoke).

The first few times you light the stove, the fire should be moderate, so that the heat-resistant paint can harden before firing more vigorously. During the hardening phase, the paint may develop obnoxious smoke and smell the first time it is lit, which is very normal. Make sure that the room is well ventilated during this period.

2.1 Lighting and refuelling intervals

Kindling (dry sticks) requires a large volume of air for quick combustion. When lighting the stove from cold it will help to keep the main door ajar (2-3cms) for the first few minutes. The primary air supply should be fully open during lighting.
When only burning wood it is recommended that a 1 cm deep ash bed be established and maintained on the grate of the stove.

1. A layer of embers will form rapidly if the stove is lit with 2 - 4 fire lighters or 7 - 10 rolled up sheets of newspaper, underneath roughly 1-2 kg of dry kindling.

2. Fully open to the right the air supply that is controlled by the handle positioned beneath the ash lip.

3. After the paper/fire lighters have caught fire, leave the fire door ajar about 2-3 cm, so that the chimney draws well.

4. After 5-10 minutes the chimney draft should be established, at this point close the fire door. If all the necessary conditions are met, a nice layer of embers will start to accumulate after another 15 - 20 minutes.

5. Refuelling of your stove should be done while there are still glowing embers in the bed. Spread the embers across the bottom, but concentrated mostly towards the front of the stove.

6. Place three pieces of fuel weighing roughly 0.7 kg and measuring about 30 cm in length across the embers in one layer, with spacing of roughly 1 cm between the pieces of wood.

7. When the primary air supply is opened all the way and the door is closed, the new fuel will ignite in a few minutes.

8. Once the new fuel has taken, adjust the secondary air amount to the desired setting; optimal combustion will continue until glowing charcoals are produced.
   Under normal chimney draft conditions, expect to refuel your stove every 70 - 80 minutes.

9. A new charge of wood can be added by repeating steps 5 & 6.

The stove door should normally be opened gently the first 2 - 3 centimetres, then you should wait until the pressure has equalised before opening the door all the way. This technique will prevent smoke from getting out, particularly when there is a poor draught.

The stove door should never be opened when the stove is being fired vigorously.

Once the wood has burned out, it becomes glowing charcoal. If a good layer of embers has already formed on top of a sufficient layer of ash, the stove can keep warm for a very long time, not least due to the favourable qualities of the cast iron.

We would strongly recommend that you do not leave your stove alit at night. It harms the environment, and constitutes very poor use of the wood, as the gases in the wood do not ignite at the low temperature, but settle as soot (unburned gases) in the chimney and stove. Extreme conditions, such as poor draught in the chimney, large quantities of wood or wet wood, may, in the worst-case scenario, cause an explosive ignition.

When firing in the summer period, when there is minimal need for heat, the combustion will be poor. The stove provides too much heat, so the combustion should be reduced. But always remember to make sure that there are lasting flames until the wood becomes charcoal. If you want a weaker fire, stoke up using less wood.

If you fire the stove using wet wood, a lot of the fuel's thermal energy will be spent forcing the water out of the wood, without releasing any heat to the stove. This incomplete combustion results in a layer of soot being left in the stove, pipe and chimney.

Comparison between wood-burning and oil-burning

Type of wood (moisture content 20%)	No. of cubic metres per 1000 litre of oil
Oak	7.0
Beech	7.0
Ash	7.2
Sycamore	7.5
Birch	8.0
Elm	8.9
Common spruce	10.4
Silver fir	10.9

3.0 Routine stove maintenance

3.1 External maintenance

The surface of the stove is painted with heat-resistant Senotherm paint. If the stove is used too vigorously, the painted surface may take-on a greyish tinge. It is easily maintained by simply vacuuming the surface with a soft brush attachment and applying two light layers of paint.

Morsø stoves are painted in Morsø dark grey. The touch-up paint is available either as aerosol spray or as regular brush-on.

3.2 Internal maintenance

Ceramic glass

If the stove is used and installed onto a flue with the correct draft, very little or no deposits should appear on the ceramic glass. It is usual for soot deposits to appear during long slumbering fires however, once the fire has been re-established to a burn brightly, these deposits should burn off.

If the glass window becomes thoroughly covered in soot due to faulty operation or poor draft, the soot can be easily removed using, e.g. Morsø Glass Cleaner, but please ensure that the glass is cold before cleaning. Avoid fuelling the stove with wood that is so long that it presses against the glass when the door is closed.

Reasons for sooted glass window:

- **fuel is too wet (green)**
- **pieces of fuel/uncut wood are too thick**
- **operating temperature of the stove is too low**
- **too much air coming through bottom grate**
- **poor chimney draft**

Ceramic glass replacement

Ceramic glass cannot be recycled because it has a higher melting point that ordinary glass. If ceramic glass is mixed with ordinary glass, the raw material is spoiled, and the reclaiming process may be halted. Take care that the ovenproof glass does not end up among ordinary recycled waste. That will be a great benefit to the environment.
Note: Should be handed in to a recycling station as ceramic glass.

Internal cast-iron parts and/or wear components

The shaking grate, baffle plate and other internal components that are in direct contact with the fire are all constituted as ‘wear’ components or consumables, as, they are exposed to the most wear. When used properly, these parts will last for many years, but overly vigorous use will naturally shorten the lifespan. The aforementioned parts are all easily replaceable.
If the baffle plate is damaged or warped and is not replaced in time, the top plate could become subject to excessively high temperatures, which may lead to damage here also.
Note: that no unauthorised alterations to the stove design should be undertaken, and always ensure that any replacement parts purchased are Morsø original parts.

Reasons for premature wear of internal parts
- **Stove being used/fired too vigorously**
- **Too little air passing through the bottom grate**
- **Use of excessively dry wood (wood from old furniture)**
- **Excessive debris collection on baffle plate or inner fireback (see section on cleaning)**
- **Ash level too high in the ash pan (see section on ash)**

Gaskets
The rope gaskets in the door will need regular inspection in order to ensure and maintain full control of your stove's burning rate; over time the rope gaskets will harden and will become less airtight; at this point you will need to remove and replace with new. Use only the genuine Morsø gasket kit, which comes with detailed replacement instructions.

NOTE:
Normal wear components (inner parts) are not covered by Morsø's 10-year guarantee.

Maintenance products (Spare Parts, Glass Cleaner, Paint, Gasket Kit, etc) are all available from your authorised Morsø dealer.

3.3 Cleaning the stove

During normal use and sweeping of your stove and chimney, a layer of ash, soot or debris can form, particularly on the top of the baffle plate or inner fireback. Any deposits allowed to build-up over time will have an insulating effect on these parts, thus restricting expansion; this will ultimately result in a shorter lifespan. The chrome-iron baffle plate and bricks can easily be removed from the stove and should be regularly checked for debris and cleaned. You must ensure that your chimney sweep removes all soot and debris from the stove after the sweeping process.

Your chimney should be swept at least once a year; however a regular inspection of your stovepipe and chimney will determine whether a more frequent approach should be adopted.

Ash
In order to achieve the highest combustion temperature possible when burning solely wood, it is important that a 1cm deep bed of ash is established on top of the grate area. Excess ash should be removed by raking ash through the grate; surplus ash will fall into the ash pan below the grate where it can be easily and safely removed.

Be sure to empty the ash pan before it gets completely full; if the ash level reaches the underside of the grate, air flow through the grate will be restricted and will lead to over-heating and premature wear of the grate parts.

When emptying the ash pan always dump the waste ash into a metal container (dustbin) where it can fully cool before being taken away by your refuse collector. Ash from a wood-burning stove does not benefit your garden as fertiliser.

Maintenance parts

Description	Product Code
Cast iron grate	44711600
Cast iron baffles	34711800
Stainless Steel pipe - long	71710900
Stainless Steel pipe - short	71711000
Door Glass	79710000
Right Side brick	79710200
Left Side brick	79710300
Back brick	79710100
Brick securing bar	71710600

Morsø Jernstøberi A/S - 04.12.2009 - 72712000

MORSØ JERNSTØBERI A/S . DK-7900 NYKØBING MORS
E-Mail: stoves@morsoe.com · Website: www.morsoe.com